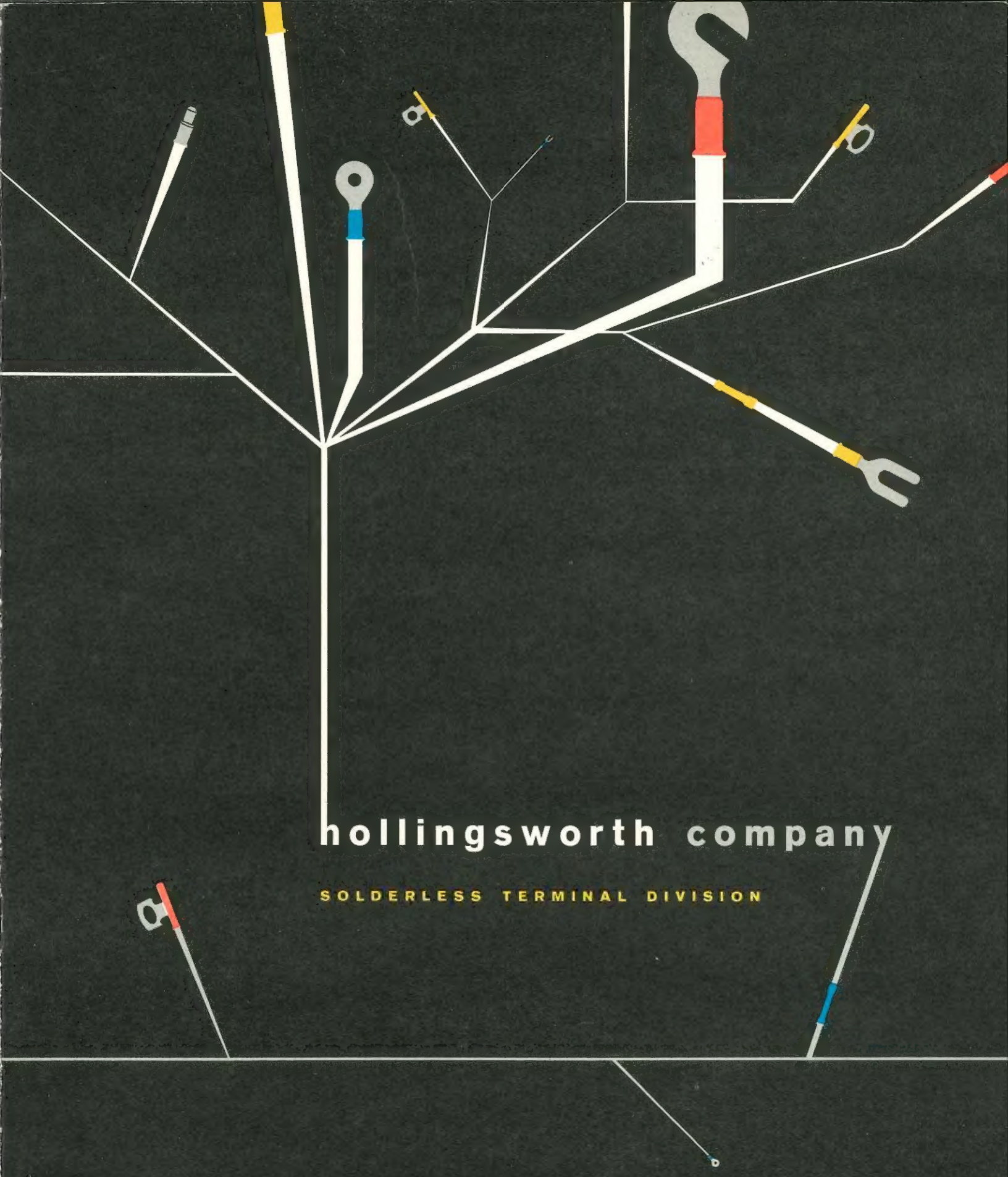

hollingsworth company

SOLDERLESS TERMINAL DIVISION

When choosing a supplier for a particular product, most manufacturers are inclined to select a company whose major activity is in that product area — for experience shows that concentrated effort within a clearly defined perimeter yields deeper knowledge about the subject than broad but shallow activities in widespread areas.

The Solderless Terminal Division of the Hollingsworth Company is a supplier of wire terminating devices. This is its major activity and this is where it concentrates all its effort. Beginning operations in 1955, the Division has steadily developed a standard line of wire terminating products which include solderless terminals, wire splices, tags and pigtail connectors. These devices are described in this catalog.

Hollingsworth also has an extensive background in developing many special designs for unusual termination problems . . . for wherever wire is used to conduct the flow of electron current, Hollingsworth can provide the proper connector to terminate the circuit.

hollingsworth

~~D26-1C~~

D13-24

Received 9/14/66

[redacted]

~~XD-26-1~~ (1D)

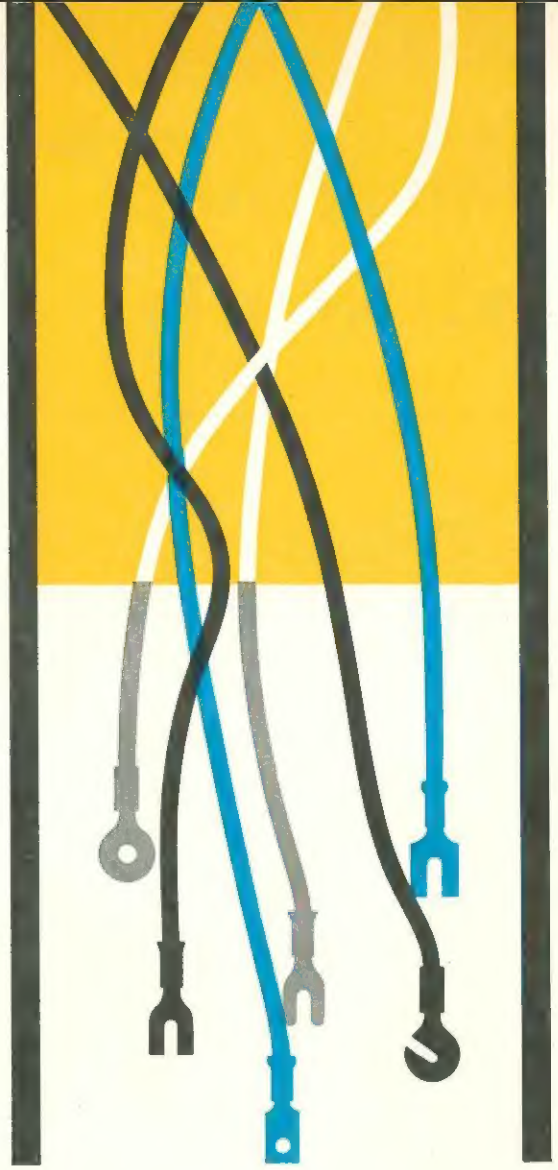

solderless terminals

One of the recent manufacturing improvements in the production of electrically-wired equipment has been the introduction of a pressure-type connector — the solderless terminal. This device, most importantly, has both electrical and mechanical advantages over the techniques of hot solder joints or wire wrapping. Its use also increases production speed, reduces labor and material costs, simplifies installation and maintenance problems, and insures a degree of reliability and product uniformity impossible to obtain with other termination methods.

A solderless terminal is applied by pressure contact through use of a hand operated or machine crimping tool. Under this crimping pressure, the metal barrel of the terminal and the wire strands inserted into it become compressed together to form a single high conducting surface. Serrations inside the barrel increase the strength of mechanical grip on the wire and electroplating of the terminal provides a high corrosion resistance between the contacting surfaces. Thus, the solderless terminal becomes a vibration-proof, moisture resistant, extremely low resistance connection between two electrical conductors.

fixed insulated insulation grip

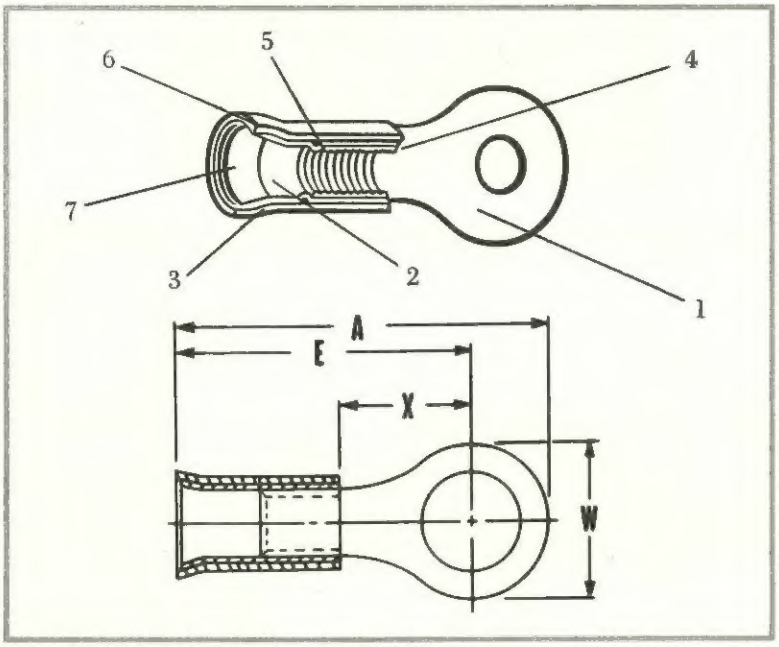

TYPE FIIG

1 Entire terminal is high conductivity copper, electro-plated for corrosion resistance 2 Metal sleeve over barrel grips wire insulation, prevents fraying and allows lead to bend without breaking 3 Nylon or plastic tubing insulates the terminal sleeve 4 Barrel is serrated with V-type grooves which grip wire strands firmly 5 Beveled terminal mouth for fast, easy wire insertion 6 Color coded by wire size: red 22-16, blue 16-14, yellow 12-10 7 Maximum wire insulation diameter accepted:

22-16	16-14	12-10
.170	.200	.267

The Type FIIG Ring Tongue terminal meets MIL-T-7928C, Type II, Class I specifications.

WIRE SIZE 22-16

CAT. NO.	STUD SIZE	A	E	W	X
R1880M	4	3/4	41/64	7/32	11/64
R1880S	4	21/32	35/64	7/32	11/64
R1881M	6	3/4	41/64	7/32	11/64
R1881S	6	21/32	35/64	7/32	11/64
R1885M	6	15/16	51/64	9/32	21/64
R1885S	6	27/32	45/64	9/32	21/64
R1890M	8	15/16	25/32	5/16	5/16
R1890S	8	27/32	11/16	5/16	5/16
R1891M	10	15/16	25/32	5/16	5/16
R1891S	10	27/32	11/16	5/16	5/16
R1894M	1/4	1 11/64	59/64	31/64	15/32
R1894S	1/4	15/64	53/64	31/64	15/32
R1895M	5/16	1 11/64	59/64	31/64	15/32
R1895S	5/16	15/64	53/64	31/64	15/32
R1896M	3/8	1 3/32	31/32	5/8	15/32
R1896S	3/8	1 3/16	7/8	5/8	15/32
SQ6020	5	55/64	47/64	15/64	9/32
SQ6021	6	55/64	47/64	15/64	9/32
SQ6022	8	55/64	47/64	15/64	9/32
S2404	6	15/16	25/32	5/16	5/16
S2404S	6	27/32	11/16	5/16	5/16
S2053	8	15/16	25/32	5/16	5/16
S2053S	8	27/32	11/16	5/16	5/16
S2054	10	15/16	25/32	5/16	5/16
S2054S	10	27/32	11/16	5/16	5/16
BS24042	6	13/16	21/32	19/64	3/16
BS20532	8	13/16	21/32	19/64	3/16
BS20542	10	13/16	21/32	19/64	3/16
SF2562	6	13/16	21/32	19/64	3/16
SF2498	8	13/16	21/32	19/64	3/16
SF2499	10	13/16	21/32	19/64	3/16
H4313	6	15/16	25/32	5/16	5/16
H4313S	6	27/32	11/16	5/16	5/16
H2456	8	15/16	25/32	5/16	5/16
H2456S	8	27/32	11/16	5/16	5/16
H2457	10	15/16	25/32	5/16	5/16
H2457S	10	27/32	11/16	5/16	5/16

HOLLINGSWORTH

RING TONGUE

WIRE SIZE 16-14						WIRE SIZE 12-10					
CAT. NO.	STUD SIZE	A	E	W	X	CAT. NO.	STUD SIZE	A	E	W	X
R2442M	6	25/32	21/32	1/4	5/32	R5107M	6	1 1/32	27/32	3/8	9/32
R2442S	6	11/16	9/16	1/4	5/32	R5108M	8	1 1/32	27/32	3/8	9/32
R1901M	6	15/16	49/64	11/32	19/64	R5109M	10	1 1/32	27/32	3/8	9/32
R1901S	6	27/32	43/64	11/32	19/64	R5110M	1/4	1 11/32	1 5/64	33/64	17/32
R1901G	6	1 1/64	55/64	5/16	25/64	R5111M	5/16	1 11/32	1 5/64	33/64	17/32
R1902M	8	15/16	49/64	11/32	19/64	R5112M	3/8	1 3/8	1 5/64	39/64	1/2
R1902S	8	27/32	43/64	11/32	19/64						
R1902G	8	1 1/64	55/64	5/16	25/64						
R1903M	10	15/16	49/64	11/32	19/64						
R1903S	10	27/32	43/64	11/32	19/64						
R1903G	10	1 1/64	55/64	5/16	25/64						
R1906M	1/4	1 1/16	53/64	15/32	23/64						
R1906S	1/4	31/32	47/64	15/32	23/64						
R1907M	5/16	1 1/16	53/64	15/32	23/64						
R1907S	5/16	31/32	47/64	15/32	23/64						
R1908M	3/8	1 3/32	31/32	5/8	15/32						
R1908S	3/8	1 3/16	7/8	5/8	15/32						

RECTANGULAR TONGUE

SQ7021	6	1 1/32	27/32	1/4	3/8
SQ7022	8	1 1/32	27/32	1/4	3/8
SQ7023	10	1 1/32	27/32	1/4	3/8

SPADE

S2058	6	15/16	3/4	23/64	3/8						
S2058S	6	27/32	21/32	23/64	3/8	S2587	6	1 1/32	27/32	3/8	9/32
S2059	8	15/16	3/4	23/64	3/8	S2588	8	1 1/32	27/32	3/8	9/32
S2059S	8	27/32	21/32	23/64	3/8	S2589	10	1 1/32	27/32	3/8	9/32
S2060	10	15/16	3/4	23/64	3/8						
S2060S	10	27/32	21/32	23/64	3/8						

BLOCK SPADE

BS20582	6	13/16	21/32	19/64	3/16	BS25872	6	1 1/32	13/16	27/64	1/4
BS20592	8	13/16	21/32	19/64	3/16	BS25882	8	1 1/32	13/16	27/64	1/4
BS20602	10	13/16	21/32	19/64	3/16	BS25892	10	1 1/32	13/16	27/64	1/4

SPADE FLARED

SF20861	6	13/16	21/32	19/64	3/16	SF2508	6	1 1/32	13/16	27/64	1/4
SF20862	8	13/16	21/32	19/64	3/16	SF2509	8	1 1/32	13/16	27/64	1/4
SF20863	10	13/16	21/32	19/64	3/16	SF2510	10	1 1/32	13/16	27/64	1/4

HOOK

H20381	6	15/16	3/4	3/8	9/32						
H20381S	6	27/32	21/32	3/8	9/32	H21608	6	1 1/32	27/32	3/8	9/32
H20306	8	15/16	3/4	3/8	9/32	H21609	8	1 1/32	27/32	3/8	9/32
H20306S	8	27/32	21/32	3/8	9/32	H21610	10	1 1/32	27/32	3/8	9/32
H5481	10	15/16	3/4	3/8	9/32						
H5481S	10	27/32	21/32	3/8	9/32						

insulation grip

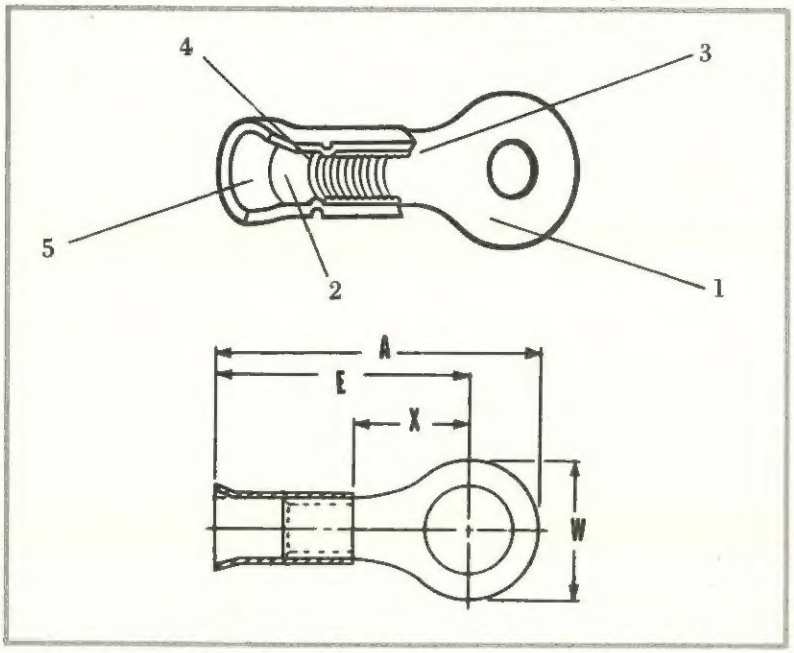

TYPE IG

1 Terminal is made from high quality copper and is electro-plated for corrosion resistance 2 Metal sleeve fitted over barrel grips wire insulation, prevents fraying and allows lead to bend without breaking 3 Barrel is serrated with V-type grooves which grip wire strands firmly 4 Beveled terminal mouth for fast, easy wire insertion 5 Maximum wire insulation diameter accepted:

22-16	16-14	12-10
.170	.200	.267

		WIRE SIZE 22-16			
CAT. NO.	STUD SIZE	A	E	W	X
R1391	4	45/64	19/32	7/32	11/64
R1391S	4	39/64	2/3	7/32	11/64
R1393	6	45/64	19/32	7/32	11/64
R1393S	6	39/64	2/3	7/32	11/64
R1159	6	57/64	3/4	9/32	21/64
R1159S	6	51/64	21/32	9/32	21/64
R1160	8	57/64	47/64	5/16	5/16
R1160S	8	51/64	41/64	5/16	5/16
R1161	10	57/64	47/64	5/16	5/16
R1161S	10	51/64	41/64	5/16	5/16
R1176	1/4	1 1/8	57/64	31/64	15/32
R1176S	1/4	1 1/32	51/64	31/64	15/32
R1177	5/16	1 1/8	57/64	31/64	15/32
R1177S	5/16	1 1/32	51/64	31/64	15/32
R1178	3/8	1 5/64	49/64	5/8	15/32
R1178S	3/8	49/64	43/64	5/8	15/32
SQ6030	5	13/16	45/64	15/64	9/32
SQ6031	6	13/16	45/64	15/64	9/32
SQ6032	8	13/16	45/64	15/64	9/32
S1657	6	57/64	47/64	5/16	5/16
S1657S	6	51/64	41/64	5/16	5/16
S1644	8	57/64	47/64	5/16	5/16
S1644S	8	51/64	41/64	5/16	5/16
S1642	10	57/64	47/64	5/16	5/16
S1642S	10	51/64	41/64	5/16	5/16
BS16572	6	49/64	39/64	19/64	3/16
BS16442	8	49/64	39/64	19/64	3/16
BS16422	10	49/64	39/64	19/64	3/16
SF2420	6	49/64	39/64	19/64	3/16
SF2496	8	49/64	39/64	19/64	3/16
SF2497	10	49/64	39/64	19/64	3/16
H1628	6	57/64	49/64	5/16	5/16
H1628S	6	51/64	43/64	5/16	5/16
H1629	8	57/64	49/64	5/16	5/16
H1629S	8	51/64	43/64	5/16	5/16
H1630	10	57/64	49/64	5/16	5/16
H1630S	10	51/64	43/64	5/16	5/16

RING TONGUE

WIRE SIZE 16-14						WIRE SIZE 12-10					
CAT. NO.	STUD SIZE	A	E	W	X	CAT. NO.	STUD SIZE	A	E	W	X
R2190	6	45/64	37/64	1/4	5/32	R1825	6	31/32	25/32	3/8	9/32
R2190S	6	39/64	31/64	1/4	5/32	R1826	8	31/32	25/32	3/8	9/32
R0926	6	57/64	23/32	11/32	19/64	R1771	10	31/32	25/32	3/8	9/32
R0926S	6	51/64	5/8	11/32	19/64	R1772	1/4	1 9/32	1 1/32	33/64	17/32
R0926G	6	31/32	13/16	5/16	25/64	R1827	5/16	1 9/32	1 1/32	33/64	17/32
R0927	8	57/64	23/32	11/32	19/64	R1828	3/8	1 5/16	1"	39/64	1/2
R0927S	8	51/64	5/8	11/32	19/64						
R0927G	8	31/32	13/16	5/16	25/64						
R0928	10	57/64	23/32	11/32	19/64						
R0928S	10	51/64	5/8	11/32	19/64						
R0928G	10	31/32	13/16	5/16	25/64						
R1168	1/4	1 1/64	25/32	15/32	23/64						
R1168S	1/4	59/64	11/16	15/32	23/64						
R1169	5/16	1 1/64	25/32	15/32	23/64						
R1169S	5/16	59/64	11/16	15/32	23/64						
R1170	3/8	1 7/64	51/64	5/8	15/32						
R1170S	3/8	1 1/64	45/64	5/8	15/32						

RECTANGULAR TONGUE

SQ7031	6	63/64	51/64	1/4	3/8
SQ7032	8	63/64	51/64	1/4	3/8
SQ7033	10	53/64	51/64	1/4	3/8

SPADE

S1710	6	57/64	45/64	3/8	9/32						
S1710S	6	51/64	39/64	3/8	9/32	S1829	6	31/32	25/32	3/8	9/32
S1711	8	57/64	45/64	3/8	9/32	S1830	8	31/32	25/32	3/8	9/32
S1711S	8	51/64	39/64	3/8	9/32	S1831	10	31/32	25/32	3/8	9/32
S1712	10	57/64	45/64	3/8	9/32						
S1712S	10	51/64	39/64	3/8	9/32						

BLOCK SPADE

BS17102	6	49/64	39/64	19/64	3/16	BS18292	6	31/32	3/4	27/64	1/4
BS17112	8	49/64	39/64	19/64	3/16	BS18302	8	31/32	3/4	27/64	1/4
BS17122	10	49/64	39/64	19/64	3/16	BS18312	10	31/32	3/4	27/64	1/4

SPADE FLARED

SF0861	6	49/64	39/64	19/64	3/16	SF2416	6	31/32	3/4	27/64	1/4
SF0862	8	49/64	39/64	19/64	3/16	SF2417	8	31/32	3/4	27/64	1/4
SF0863	10	49/64	39/64	19/64	3/16	SF2418	10	31/32	3/4	27/64	1/4

HOOK

H21536	6	57/64	45/64	3/8	9/32						
H21536S	6	51/64	39/64	3/8	9/32	H1608	6	31/32	25/32	3/8	9/32
H2515	8	57/64	45/64	3/8	9/32	H1609	8	31/32	25/32	3/8	9/32
H2515S	8	51/64	39/64	3/8	9/32	H1610	10	31/32	25/32	3/8	9/32
H3438	10	57/64	45/64	3/8	9/32						
H3438S	10	51/64	39/64	3/8	9/32						

fixed insulated terminal

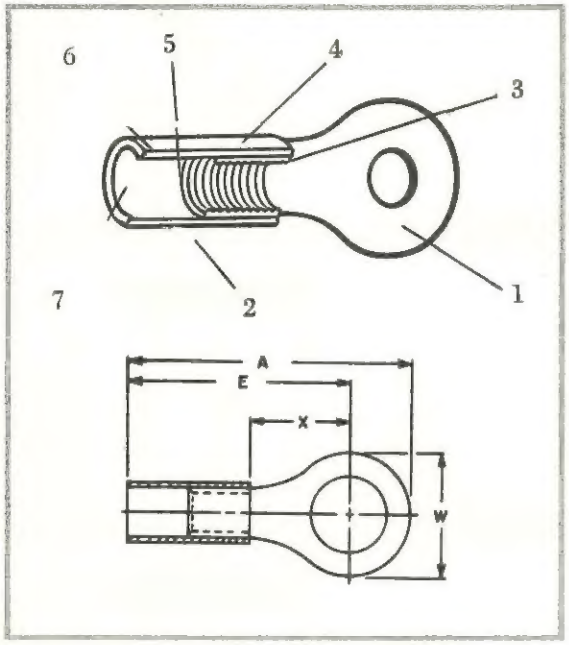

TYPE FIT

1 Made from high grade copper, electro-plated for corrosion resistance 2 Vinyl or nylon insulated sleeve is fitted over terminal barrel. Vinyl is supplied unless nylon is specified 3 Serrated V-type grooves on barrel grip wire strands firmly 4 Color coded by wire size: red 22-16, blue 16-14, yellow 12-10 5 Beveled terminal mouth for fast, easy wire insertion 6 Can be obtained with flared insulation to accept wire sizes with oversize insulation by adding letter F after catalog number 7 Maximum wire insulation diameter accepted:

	22-16	16-14	12-10
Unflared	.122	.150	.210
Flared	.175	.180	.265

WIRE SIZE 22-16

RING TONGUE

CAT. NO.	STUD SIZE	A	E	W	X
R4141	4	47/64	5/8	7/32	11/64
R4141S	4	41/64	17/32	7/32	11/64
R4142	6	47/64	5/8	7/32	11/64
R4142S	6	41/64	17/32	7/32	11/64
R4147	6	59/64	25/32	9/32	21/64
R4147S	6	53/64	11/16	9/32	21/64
R4148	8	59/64	49/64	5/16	5/16
R4148S	8	53/64	43/64	5/16	5/16
R4149	10	59/64	49/64	5/16	5/16
R4149S	10	53/64	43/64	5/16	5/16
R4150	1/4	15/32	59/64	31/64	15/32
R4150S	1/4	11/16	53/64	31/64	15/32
R4151	5/16	15/32	59/64	31/64	15/32
R4151S	5/16	11/16	53/64	31/64	15/32
R4152M	3/8	115/64	59/64	5/8	15/32
R4152S	3/8	19/64	53/64	5/8	15/32

RECTANGULAR TONGUE

SQ6010	5	27/32	47/64	15/64	9/32
SQ6011	6	27/32	47/64	15/64	9/32
SQ6012	8	27/32	47/64	15/64	9/32

SPADE

S4154	6	59/64	49/64	5/16	5/16
S4154S	6	53/64	43/64	5/16	5/16
S4155	8	59/64	49/64	5/16	5/16
S4155S	8	53/64	43/64	5/16	5/16
S4156	10	59/64	49/64	5/16	5/16
S4156S	10	53/64	43/64	5/16	5/16

BLOCK SPADE

BS41542	6	51/64	41/64	19/64	3/16
BS41552	8	51/64	41/64	19/64	3/16
BS41562	10	51/64	41/64	19/64	3/16

SPADE FLARED

SF20752	6	51/64	41/64	19/64	3/16
SF20753	8	51/64	41/64	19/64	3/16
SF20754	10	51/64	41/64	19/64	3/16

HOOK

H4501	6	59/64	49/64	5/16	5/16
H4501S	6	53/64	43/64	5/16	5/16
H21699	8	59/64	49/64	5/16	5/16
H21699S	8	53/64	43/64	5/16	5/16
H21700	10	59/64	49/64	5/16	5/16
H21700S	10	53/64	43/64	5/16	5/16

WIRE SIZE 16-14

CAT. NO.	STUD SIZE	A	E	W	X
R4158	6	47/64	39/64	1/4	5/32
R4158S	6	41/64	33/64	1/4	5/32
R4159	6	59/64	3/4	11/32	19/64
R4159S	6	53/64	21/32	11/32	19/64
R4159G	6	1"	27/32	5/16	25/64
R4160	8	59/64	3/4	11/32	19/64
R4160S	8	53/64	21/32	11/32	19/64
R4160G	8	1"	27/32	5/16	25/64
R4161	10	59/64	3/4	11/32	19/64
R4161S	10	53/64	21/32	11/32	19/64
R4161G	10	1"	27/32	5/16	25/64
R4162	1/4	13/64	13/16	15/32	23/64
R4162S	1/4	61/64	23/32	15/32	23/64
R4163	5/16	13/64	13/16	15/32	23/64
R4163S	5/16	61/64	23/32	15/32	23/64
R4164	3/8	115/64	59/64	5/8	15/32
R4164S	3/8	19/64	53/64	5/8	15/32

WIRE SIZE 12-10

CAT. NO.	STUD SIZE	A	E	W	X
R4168	6	11/64	53/64	3/8	9/32
R4169	8	11/64	53/64	3/8	9/32
R4170	10	11/64	53/64	3/8	9/32
R4171	1/4	121/64	15/64	33/64	17/32
R4172	5/16	121/64	15/64	33/64	17/32
R4173	3/8	123/64	13/64	39/64	1/2

SQ7011	6	11/64	53/64	1/4	3/8
SQ7012	8	11/64	53/64	1/4	3/8
SQ7013	10	11/64	53/64	1/4	3/8

S4165	6	59/64	47/64	3/8	9/32
S4165S	6	53/64	41/64	3/8	9/32
S4166	8	59/64	47/64	3/8	9/32
S4166S	8	53/64	41/64	3/8	9/32
S4167	10	59/64	47/64	3/8	9/32
S4167S	10	53/64	41/64	3/8	9/32

S4174	6	59/64	47/64	3/8	9/32
S4175	8	59/64	47/64	3/8	9/32
S4176	10	59/64	47/64	3/8	9/32

BS41652	6	51/64	41/64	19/64	3/16
BS41662	8	51/64	41/64	19/64	3/16
BS41672	10	51/64	41/64	19/64	3/16

BS41742	6	59/64	45/64	27/64	1/4
BS41752	8	59/64	45/64	27/64	1/4
BS41762	10	59/64	45/64	27/64	1/4

SF20858	6	51/64	41/64	19/64	3/16
SF20859	8	51/64	41/64	19/64	3/16
SF20860	10	51/64	41/64	19/64	3/16

SF20268	6	59/64	45/64	27/64	1/4
SF20269	8	59/64	45/64	27/64	1/4
SF20270	10	59/64	45/64	27/64	1/4

H20262	6	59/64	47/64	3/8	9/32
H20262S	6	53/64	41/64	3/8	9/32
H20263	8	59/64	47/64	3/8	9/32
H20263S	8	53/64	41/64	3/8	9/32
H20264	10	59/64	47/64	3/8	9/32
H20264S	10	53/64	41/64	3/8	9/32

H20265	6	59/64	47/64	3/8	9/32
H20266	8	59/64	47/64	3/8	9/32
H20267	10	59/64	47/64	3/8	9/32

RING TONGUE

WIRE SIZE 8

CAT. NO.	STUD SIZE	A	E	W	X
R3030	8	15/32	59/64	15/32	23/64
R3031	10	15/32	59/64	15/32	23/64
R3032	1/4	15/32	59/64	15/32	23/64
R3033	5/16	17/16	19/64	19/32	37/64
R3034	3/8	17/16	19/64	19/32	37/64

WIRE SIZE 6

R4001	10	115/32	115/64	15/32	35/64
R4002	1/4	115/32	115/64	15/32	35/64
R4003	5/16	19/16	115/64	21/32	35/64
R4004	3/8	19/16	115/64	21/32	35/64
R4005	7/16	19/16	115/64	21/32	35/64

WIRE SIZE 4

R5101	1/4	119/32	15/16	9/16	1/2
R5102	5/16	141/64	15/16	21/32	1/2
R5103	3/8	141/64	15/16	21/32	1/2

WIRE SIZE 2

R8101	1/4	159/64	19/16	45/64	5/8
R8102	5/16	159/64	19/16	45/64	5/8
R8103	3/8	159/64	19/16	45/64	5/8
R8104	1/2	131/32	19/16	51/64	5/8

non-insulated terminal

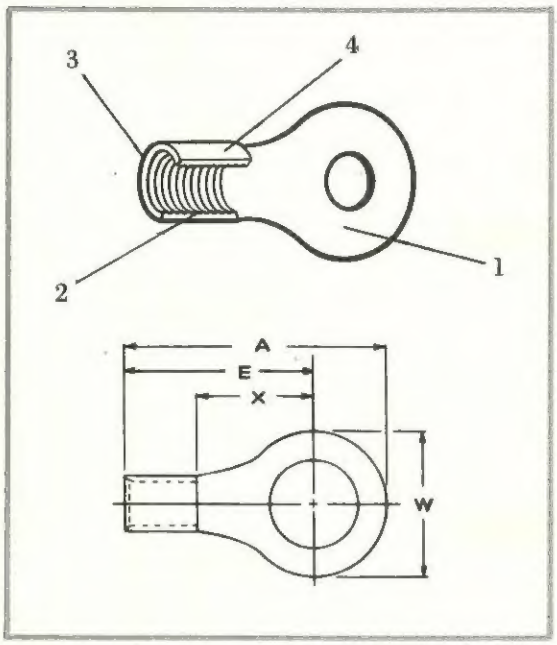

TYPE NIT

1 High conductivity pure copper terminal, electro-plated for corrosion resistance
2 Serrated V-type grooves on barrel grip wire strands firmly 3 Beveled terminal mouth for fast, easy wire insertion 4 Can be obtained with a brazed barrel, which permits the terminal to be crimped anywhere on the barrel without the barrel seam opening under the pressure, by adding the letter B after the catalog number (Not required for Ring Tongue wire sizes 8, 6, 4 and 2, all of which are normally manufactured with brazed barrels)

WIRE SIZE 22-16

RING TONGUE

CAT. NO.	STUD SIZE	A	E	W	X
R4104M	4	17/32	27/64	7/32	11/64
R4104S	4	7/16	5/16	7/32	11/64
R4105M	6	17/32	27/64	7/32	11/64
R4105S	6	7/16	5/16	7/32	11/64
R4110M	6	23/32	37/64	9/32	21/64
R4110S	6	5/8	31/64	9/32	21/64
R4111M	8	23/32	9/16	5/16	5/16
R4111S	8	5/8	15/32	5/16	5/16
R4112M	10	23/32	9/16	5/16	5/16
R4112S	10	5/8	15/32	5/16	5/16
R4113M	1/4	61/64	23/32	31/64	15/32
R4113S	1/4	55/64	5/8	31/64	15/32
R4114M	5/16	61/64	23/32	31/64	15/32
R4114S	5/16	7/8	5/8	31/64	15/32
R4115M	3/8	1"	23/32	5/8	15/32
R4115S	3/8	29/32	5/8	5/8	15/32

RECTANGULAR TONGUE

SQ6001	5	47/64	5/8	15/64	9/32
SQ6002	6	47/64	5/8	15/64	9/32
SQ6003	8	47/64	5/8	15/64	9/32

SPADE

S4116	6	23/32	9/16	5/16	5/16
S4116S	6	5/8	15/32	5/16	5/16
S4117	8	23/32	9/16	5/16	5/16
S4117S	8	5/8	15/32	5/16	5/16
S4118	10	23/32	9/16	5/16	5/16
S4118S	10	5/8	15/32	5/16	5/16

BLOCK SPADE

BS41162	6	19/32	7/16	19/64	3/16
BS41172	8	19/32	7/16	19/64	3/16
BS41182	10	19/32	7/16	19/64	3/16

SPADE FLARED

SF20749	6	19/32	7/16	19/64	3/16
SF20750	8	19/32	7/16	19/64	3/16
SF20751	10	19/32	7/16	19/64	3/16

HOOK

H4500	6	23/32	9/16	5/16	5/16
H4500S	6	5/8	15/32	5/16	5/16
H4502	8	23/32	9/16	5/16	5/16
H4502S	8	5/8	15/32	5/16	5/16
H4503	10	23/32	9/16	5/16	5/16
H4503S	10	5/8	15/32	5/16	5/16

WIRE SIZE 16-14

CAT. NO.	STUD SIZE	A	E	W	X
R4120M	6	35/64	13/32	1/4	5/32
R4120S	6	29/64	5/16	1/4	5/32
R4121M	6	23/32	35/64	11/32	19/64
R4121S	6	5/8	29/64	11/32	19/64
R4121G	6	51/64	41/64	5/16	25/64
R4122M	8	23/32	35/64	11/32	19/64
R4122S	8	5/8	29/64	11/32	19/64
R4122G	8	51/64	41/64	5/16	25/64
R4123M	10	23/32	35/64	11/32	19/64
R4123S	10	5/8	29/64	11/32	19/64
R4123G	10	51/64	41/64	5/16	25/64
R4124M	1/4	27/32	39/64	15/32	23/64
R4124S	1/4	3/4	35/64	15/32	23/64
R4125M	5/16	27/32	39/64	15/32	23/64
R4125S	5/16	3/4	35/64	15/32	23/64
R4126M	3/8	1"	23/32	5/8	15/32
R4126S	3/8	29/32	5/8	5/8	15/32

WIRE SIZE 12-10

CAT. NO.	STUD SIZE	A	E	W	X
R3456M	6	21/32	17/32	3/8	9/32
R2994M	8	23/32	17/32	3/8	9/32
R3457M	10	23/32	17/32	3/8	9/32
R3458M	1/4	1 1/32	25/32	33/64	17/32
R3459M	5/16	1 1/32	25/32	33/64	17/32
R3220M	3/8	1 1/16	3/4	39/64	1/2

SQ7002	6	13/16	5/8	1/4	3/8
SQ7003	8	13/16	5/8	1/4	3/8
SQ7004	10	13/16	5/8	1/4	3/8

S4127	6	23/32	17/32	3/8	9/32
S4127S	6	5/8	7/16	3/8	9/32
S4128	8	23/32	17/32	3/8	9/32
S4128S	8	5/8	7/16	3/8	9/32
S4129	10	23/32	17/32	3/8	9/32
S4129S	10	5/8	7/16	3/8	9/32

S2995	6	23/32	17/32	3/8	9/32
S3478	8	23/32	17/32	3/8	9/32
S3479	10	23/32	17/32	3/8	9/32

BS41272	6	19/32	7/16	19/64	3/16
BS41282	8	19/32	7/16	19/64	3/16
BS41292	10	19/32	7/16	19/64	3/16

BS29952	6	21/32	1/2	27/64	1/4
BS34782	8	23/32	1/2	27/64	1/4
BS34792	10	23/32	1/2	27/64	1/4

SF20855	6	19/32	7/16	19/64	3/16
SF20856	8	19/32	7/16	19/64	3/16
SF20857	10	19/32	7/16	19/64	3/16

SF22451	6	21/32	1/2	27/64	1/4
SF22453	8	23/32	1/2	27/64	1/4
SF22456	10	23/32	1/2	27/64	1/4

H20256	6	23/32	17/32	3/8	9/32
H20256S	6	5/8	7/16	3/8	9/32
H20257	8	23/32	17/32	3/8	9/32
H20257S	8	5/8	7/16	3/8	9/32
H20258	10	23/32	17/32	3/8	9/32
H20258S	10	5/8	7/16	3/8	9/32

H22452	6	23/32	17/32	3/8	9/32
H22454	8	23/32	17/32	3/8	9/32
H22455	10	23/32	17/32	3/8	9/32

RING TONGUE

Wire Sizes 8, 6, 4 and 2 have brazed barrel

WIRE SIZE 8

CAT. NO.	STUD SIZE	A	E	W	X
R2996	8	29/32	43/64	15/32	23/64
R3460	10	29/32	43/64	15/32	23/64
R3461	1/4	29/32	43/64	15/32	23/64
R3462	5/16	1 3/16	57/64	19/32	37/64
R3463	3/8	1 3/16	57/64	19/32	37/64

WIRE SIZE 6

R64641	10	1 5/32	59/64	15/32	35/64
R64642	1/4	1 5/32	59/64	15/32	35/64
R64643	5/16	1 1/4	59/64	21/32	35/64
R64644	3/8	1 1/4	59/64	21/32	35/64
R64645	7/16	1 1/4	59/64	21/32	35/64

WIRE SIZE 4

R5001	1/4	1 15/64	61/64	5/16	1/2
R5002	5/16	1 9/32	61/64	21/32	1/2
R5003	3/8	1 9/32	61/64	21/32	1/2

WIRE SIZE 2

R8001	1/4	1 31/64	1 1/8	45/64	5/8
R8002	5/16	1 31/64	1 1/8	45/64	5/8
R8003	3/8	1 31/64	1 1/8	45/64	5/8
R8004	1/2	1 17/32	1 1/8	51/64	5/8

OFFSET RING

WIRE SIZE 14-12

CAT. NO.	STUD SIZE	A	E	W	X
OR4288	6	27/32	19/32	27/64	3/8
OR4289	8	27/32	19/32	27/64	3/8
OR4290	10	27/32	19/32	27/64	3/8

splices

Non-Insulated

Parallel

The non-insulated parallel splice is a hollow bare copper sleeve electro-plated for corrosion resistance, with serrated grooves on the barrel for inserting and crimping two parallel wires. This splice can be obtained with a brazed barrel seam by adding the letter B after the catalog number.

WIRE SIZE 22-16			WIRE SIZE 16-14			WIRE SIZE 12-10		
CAT. NO.	A	B	CAT. NO.	A	B	CAT. NO.	A	B
P4130	5/16	1/8	P4137	5/16	5/32	P4138	5/16	7/32

Butt

The non-insulated butt splice is an electro-plated copper sleeve with serrated grooves and several small indentations in the center of the sleeve for butting and crimping two wires against one another. This splice can also be obtained with a brazed seam by adding the letter B after the catalog number.

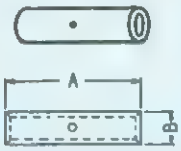

B1818	9/16	1/8	B1819	9/16	5/32	B2151	9/16	7/32

Insulated

Not-Flared

The insulated not-flared splice is a non-insulated parallel or butt splice covered with a plastic sleeve, color-coded according to wire size. Catalog numbers P4131, P4133 and P4135 have insulation over a non-insulated parallel splice and numbers B4067, B4068 and B4069 have insulation over a non-insulated butt splice. The splice can be obtained with a brazed seam by adding the letter B after the catalog number.

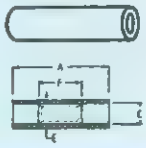

WIRE SIZE 22-16					WIRE SIZE 16-14					WIRE SIZE 12-10				
CAT. NO.	A	C	E	F	CAT. NO.	A	C	E	F	CAT. NO.	A	C	E	F
PARALLEL														
P4131	3/4	1/8	13/64	5/16	P4133	3/4	5/32	7/32	5/16	P4135	3/4	7/32	9/32	5/16
BUTT														
B4067	1 1/32	1/8	13/64	9/16	B4068	1 1/32	5/32	7/32	9/16	B4069	1 1/32	7/32	9/32	9/16

Flared

The insulated flared splice is a non-insulated parallel or butt splice covered with plastic insulation, flared on both ends and color-coded according to wire size. Catalog numbers P4132, P4134 and P4136 have flared insulation over non-insulated parallel splices and numbers B4070, B4071 and B4072 have flared insulation over non-insulated butt splices. The splice can be obtained with a brazed seam by adding the letter B after the catalog number.

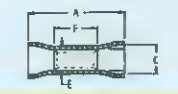

PARALLEL														
P4132	45/64	3/16	13/64	5/16	P4134	45/64	7/32	7/32	5/16	P4136	45/64	9/32	9/32	5/16
BUTT														
B4070	1"	3/16	13/64	9/16	B4071	1"	13/64	7/32	9/16	B4072	1"	17/64	9/32	9/16

pigtails

Vinyl

The vinyl pigtail is a hollow electro-plated copper sleeve with vinyl insulation that is crimped closed at one end and flared at the other end for easy insertion of wires. The insulation is color-coded according to wire size of the pigtail: red 22-16, blue 16-14, yellow 12-10.

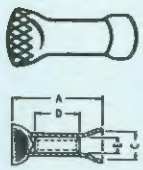

WIRE SIZE 22-16				
CAT. NO.	A	C	D	E
VP6966	5/8	1/8	5/16	1/8

WIRE SIZE 16-14				
CAT. NO.	A	C	D	E
VP6967	5/8	5/32	5/16	5/32

WIRE SIZE 12-10				
CAT. NO.	A	C	D	E
VP6968	5/8	7/32	5/16	7/32

Nylon

The nylon pigtail is a hollow electro-plated copper sleeve that is covered with a molded natural-color nylon insulation jacket. The insulation is closed at one end and widely flared at the other end for easy insertion of wires.
The wire size range of the pigtail is indicated on the closed end of the nylon jacket.

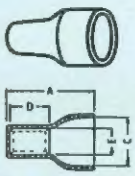

WIRE SIZE 22-14				
CAT. NO.	A	C	D	E
NP5115	19/32	9/32	9/32	5/32

WIRE SIZE 16-10				
CAT. NO.	A	C	D	E
NP5663	25/32	3/8	9/32	7/32

tags

Non-Insulated

The non-insulated tag is a bare copper terminal with a serrated barrel. The entire terminal is electro-plated for corrosion resistance and the wire size of the terminal is permanently marked directly beneath the stud hole.

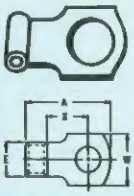

WIRE SIZE 22-16					
CAT. NO.	STUD SIZE	A	E	W	X
T1179	8&10	5/8	1/4	3/8	5/16

WIRE SIZE 16-14					
CAT. NO.	STUD SIZE	A	E	W	X
T1291	8&10	5/8	1/4	3/8	9/32

Insulated

The insulated tag is an electro-plated copper terminal with a serrated barrel and is covered with a vinyl sleeve that has been crimped closed at one end. The vinyl insulation is color-coded according to the wire size of the terminal: red 22-16, blue 16-14.

WIRE SIZE 22-16					
CAT. NO.	STUD SIZE	A	E	W	X
T6868	8&10	21/32	5/8	3/8	9/32

WIRE SIZE 16-14					
CAT. NO.	STUD SIZE	A	E	W	X
T6871	8&10	21/32	5/8	3/8	1/4

crimping tools

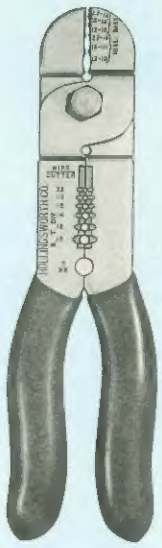

The Hollingsworth H-1 Dual Crimp hand tool is an inexpensive, precision mechanism designed to crimp both insulated and non-insulated terminals and connectors, strip wire insulation, and cut wire and insulation. Forged from hardened, high-grade steel, the tool insures a reliable and uniform crimp on terminals ranging from 22 gauge to 10 gauge and includes a special 7 mm space for crimping automotive ignition terminals. Permanently engraved markings on the tool identify the locations for inserting the different terminal and wire sizes, and insulated handles with high dialectric strength complete the features of this tool to make it a rugged, safe, and versatile device.

terminal kits

To provide the serviceman with a large assortment of wire terminating devices for different types of applications, the Hollingsworth Company provides four different service kits — each containing a standard H-1 Dual Crimp hand tool.

TYPE NK1 Radio, TV, Electrical Maintenance

This kit contains a broad selection of the non-insulated Type NIT solderless terminals.

TYPE NK2 Automotive Maintenance

This is a kit of all non-insulated terminating devices, including the Type NIT solderless terminals, butt splices and tags.

TYPE IK1 General Purpose Insulated

The Type IK1 is a general purpose kit containing all insulated type terminations, including the Type FIT solderless terminals, insulated butt splices and nylon pigtails.

TYPE CK1 Combination General Purpose Maintenance

This is a combination kit that offers an assortment of both insulated and non-insulated terminals including the Type FIIG, Type IG, Type FIT and Type NIT solderless terminals, butt splices and nylon pigtails.

Hollingsworth has representatives located in all parts of the country who are familiar with the termination problems of manufacturers of electrical equipment. Making use of their specialized technical assistance can save you time and money and can help produce a better, more reliable end product.

PLANTS AND OFFICES

- **Phoenixville, Pa.**
  Nutt & French Creek Rd.
  215-933-8947
- **Waltham, Mass.**
  4 Gordon St.
  617-899-0004
- **Fort Lauderdale, Florida**
  4340 N.W. 10th Ave.
  305-564-6454
- **Cleveland, Ohio**
  17705 Euclid Ave.
  216-531-3411
- **North Hollywood, Calif.**
  5557 Cahuenga Blvd.
  213-877-1555
- **Westchester, Ill.**
  819 Mannheim Rd.
  312-681-3724

SALES REPRESENTATIVES

1 Dallas, Texas
2 Phoenix, Arizona
3 San Francisco, Calif.
4 Seattle, Washington
5 St. Louis, Mo.
6 Atlanta, Ga.
7 Charlotte, N. C.
8 Pittsburgh, Pa.
9 Buffalo, N. Y.
10 Milwaukee, Wisc.
11 Detroit, Mich.
12 Minneapolis, Minn.
13 Toronto, Canada
14 Hawaii

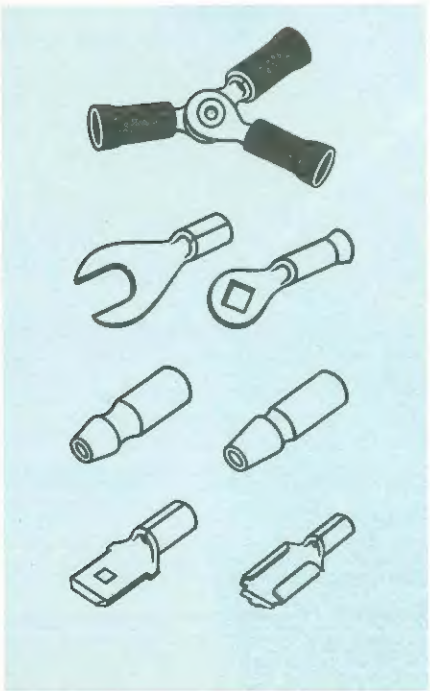

special designs

No matter how varied or complete a manufacturer's line of products, there are always certain requirements where an existing item can never do the job — a specialized design must be created. And special design calls for special knowledge; an understanding of the problems of the user, and experience with the techniques of manufacture of the product. The Hollingsworth Company has created many special designs for wire terminating devices. They know the termination problems their customers face, they are skilled in the manufacture of the product, and they are eager to undertake a project that requires some imagination or resourcefulness.

Printed in U.S.A.

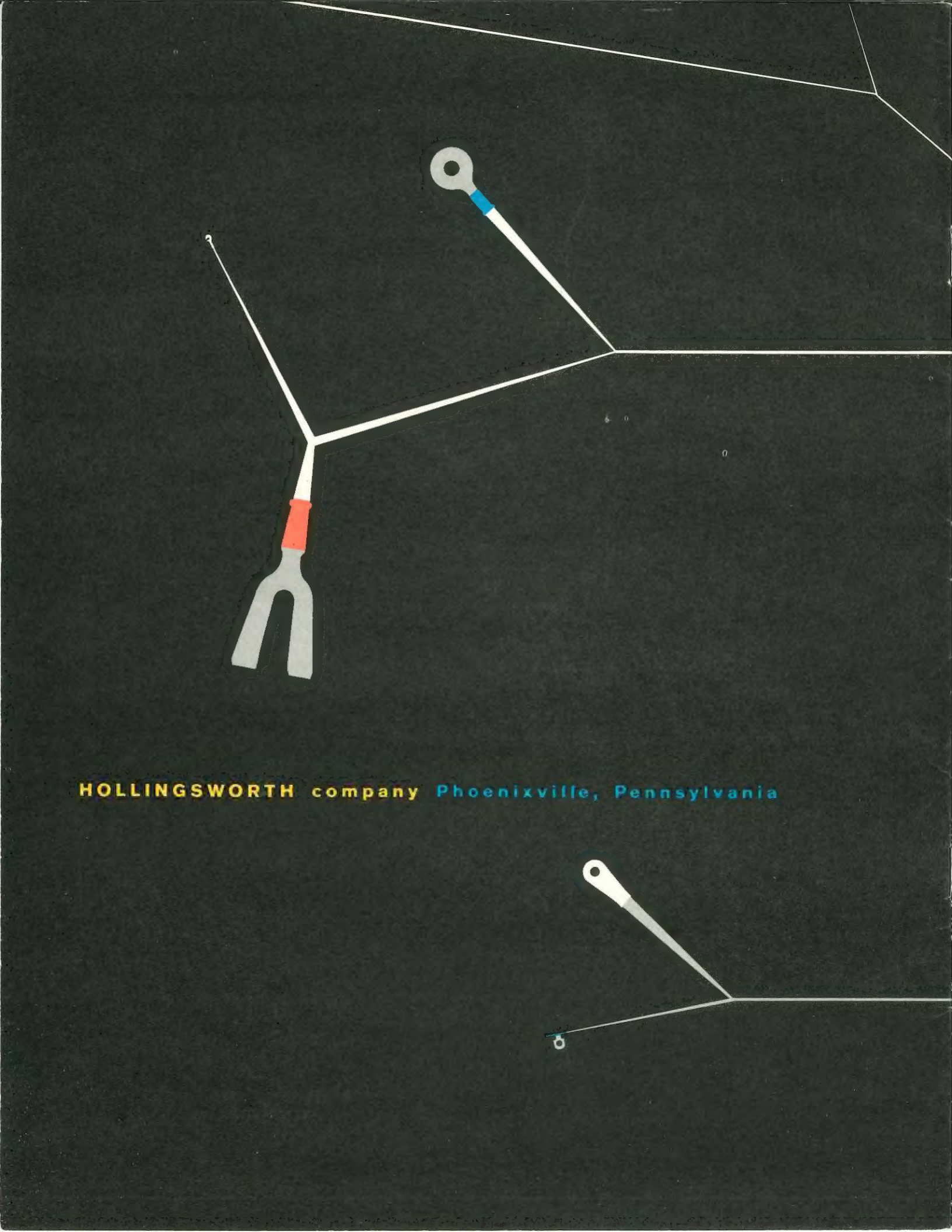

HOLLINGSWORTH company Phoenixville, Pennsylvania